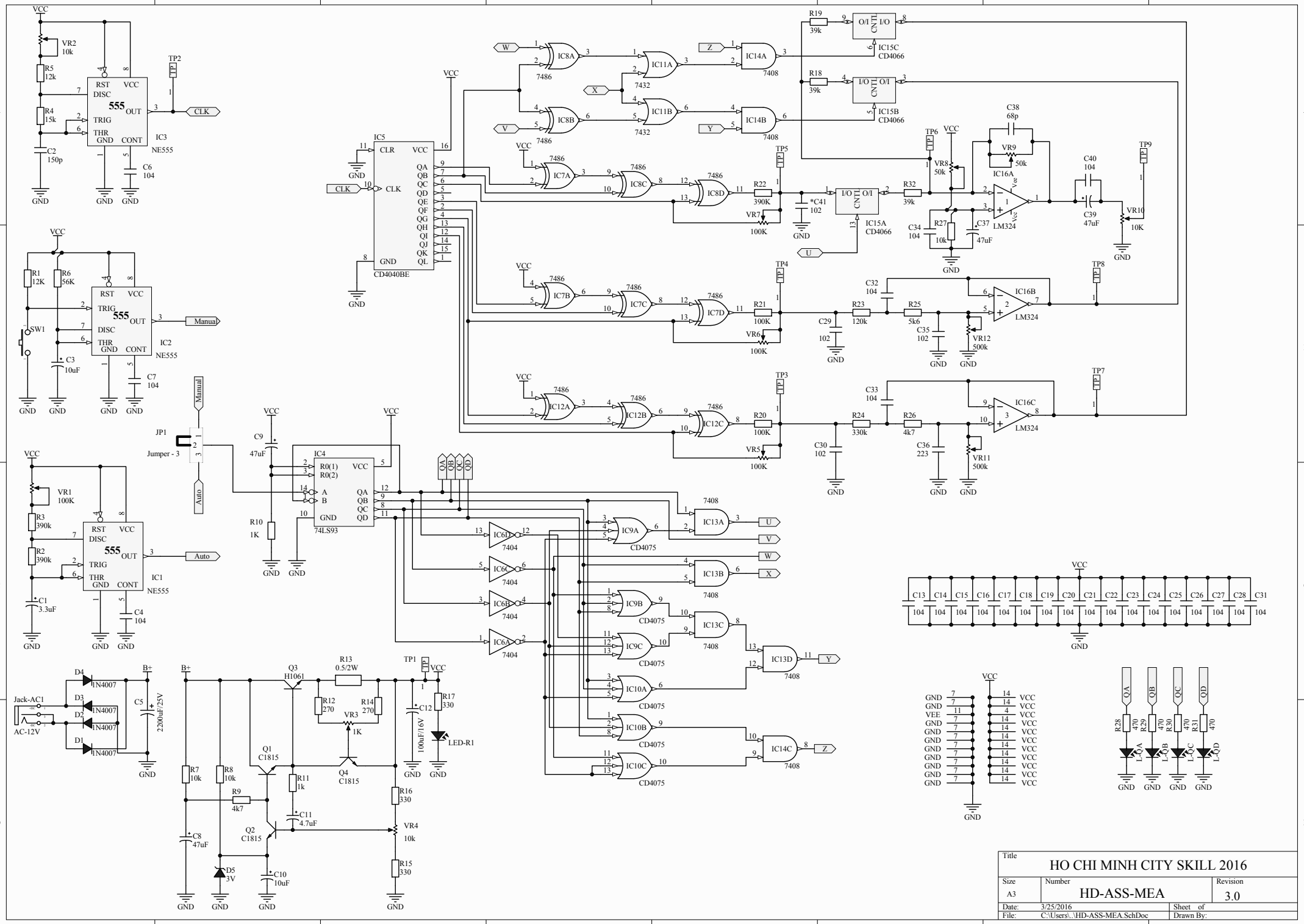
IC3 NE555
IC2 NE555
IC1 NE555
IC5 CD4040BE
IC4 74LS93
IC15C CD4066
IC15B CD4066
IC15A CD4066
IC16A LM324
IC16B LM324
IC16C LM324
Jumper - 3
Jack-AC1
AC-12V
LED-R1
Title
HO CHI MINH CITY SKILL 2016
Size
A3
Number
HD-ASS-MEA
Revision
3.0
Date: 3/25/2016
File: C:\Users\..\HD-ASS-MEA.SchDoc
Sheet of
Drawn By: